Applying HP FlexNetwork Fundamentals

Exam description

This exam tests your skills and knowledge on basic switching, routing, and wireless technologies, including Virtual LANs (VLANs), spanning tree protocols, link aggregation technologies, basic static and dynamic routing, and 802.11 standards. It also tests your ability to implement these technologies on HP networking products.

Exam ID	HP0-Y49
Exam type	Proctored exam taken at dedicated testing center
Exam duration	1 hour 55 minutes
Exam length	58 questions
Passing score	65%
Delivery languages	English, Japanese

Register for this Exam

You will need an HP Learner ID and a Pearson VUE login and password.

During the exam, you can make specific comments about the exam and items. HP welcomes these comments as part of our continuous improvement process.

No online or hard copy reference material will be allowed at the testing site. This exam may contain beta test items for experimental purposes.

Related certifications	• HP ATP - FlexNetwork Solutions V2

Who should take this exam?

This certification exam is designed for candidates with “on the job” experience. The associated training courses, which usually include labs, provide a foundation, but you are expected to have experience in the real world as well.

Exam contents

This exam has 58 questions. Here are types of questions to expect:

- Matching
- Multiple choice (multiple responses)
- Multiple choice (single response)

Tips for taking this exam

Rather than emphasize simple memorization, HP exams attempt to assess whether you have the knowledge and skills that an IT professional requires on the job. Therefore, some exam items present a scenario, which outlines a particular network environment or problem. Some exam items might also include one or more exhibits. Exhibits can be for example:

- Network topologies
- Abstracts of switch configuration file output
- Commands and command output This ExpertOne exam presents all the questions in a single block. The candidate agreement is presented first, followed by the exam introduction and instructions. Once you click the Next Question button on the instructions page, the questions will be presented one at a time. You can move from question to question, skip questions, and change your answers. However, once you submit your answers, you cannot return to review those questions or change your answers. Here are some additional tips:
- Use the Next Question / Previous Question buttons to move forward and backward between questions. The Submit button will appear when you reach the last question.
- Use the Assessment Navigator to jump between questions in a block and to review flagged questions. To do this, click the Assessment Navigator button and select the question you want to navigate to. Flagged questions are indicated above the item number in the upper left corner. The Assessment Navigator also uses different shading to indicate answered versus unanswered items.
- Use the Assessment Navigator to launch the calculator tool by clicking the Calculator button at the bottom. When you begin the exam the total number of questions will display. To estimate how much time you should allow per question, divide the total time by the number of questions. For this exam, you will have an average of just less than two minutes per question. Some questions are more complex and will require more time. You might want to answer the questions you know first. If a question is taking too much time, flag it using the Assessment Navigator, and then return to it later.

When you begin the exam the total number of questions will display. To estimate how much time you should allow per question, divide the total time by the number of questions. For this exam, you will have an average of just less than two minutes per question. Some questions are more complex and will require more time. You might want to answer the questions you know first. If a question is taking too much time, flag it using the Assessment Navigator, and then return to it later.

Take the time to read the entire question and consider all of the options carefully before you answer. If the question indicates that it features an

exhibit, study the exhibit and reread the question. Make sure to select the answer that correctly responds to the question that is asked — not simply an answer that includes some correct information. If the question asks for more than one answer, remember to select each correct answer. You will not receive partial credit for a partially correct answer.

Supporting courses

These recommended courses help you prepare for the exam:

- 00870186: HP FlexNetwork Fundamentals, Rev. 14.21

Additional study materials

- HP Networking Fundamentals Video Series - OSI Model, Rev. 13.31 (course ID 00764936)
- HP Networking Fundamentals Video Series - Binary, Rev. 13.31 (course ID 00764942)
- HP Networking Fundamentals Video Series - Data Flows, Rev. 13.31 (course ID 00765397)
- HP Networking Fundamentals Video Series - IP Addressing, Rev. 13.31 (course ID 00766100)
- HP Networking Fundamentals Video Series - IP Subnetting, Rev. 13.31 (course ID 00764933)
- HP Networking Fundamentals Video Series - TCP/UDP, Rev. 13.31 (course ID 00765415)
- HP Networking Fundamentals Video Series - VLANs, Rev. 13.31 (course ID 00764953)
- HP Networking Fundamentals Video Series - Routing, Rev. 13.31 (course ID 00764946)
- HP Networking Fundamentals Video Series - Spanning Tree, Rev. 13.31 (course ID 00764948)
- HP ATP FlexNetwork Solutions Study Guide

Objectives

This exam validates that you can successfully perform the following:

	Sections/Objectives
29%	• Describe and apply the most common Layer 2 protocols. • Describe and contrast the most common Ethernet concepts. • Explain Layer 3 routing concepts and apply Layer 3 protocols. • Define and recognize the purpose and interaction of common TCP/UDP-based upper layer applications. • Identify various security components and describe common access methods. • Describe the concepts, benefits, and types of redundancy, and apply redundancy types. • Describe and apply link aggregation. • Identify, describe, and explain VLANs. • Describe network management. • Identify and describe wireless technologies.
16%	• Identify and describe the components of a converged infrastructure using the HP FlexNetwork Architecture framework and explain their roles. • Compare and contrast datacenter, campus LAN, and branch environments. • Identify and explain products and features in the HP Networking product line. • Compare and contrast HP Networking solutions and features. • Identify which HP Networking products should be positioned given various customer environments and infrastructure needs.
35%	• Solution implementation (install, configure, startup, and upgrade per planned design) • Perform installation and configuration of devices. • Configure the management software and manage configuration files on HP switches. • Validate the installed solution via debug technology, logging, and commands.
10%	• Solution enhancement (performance-tune and optimize) • Optimize Layer 2 and Layer 3 infrastructures via broadcast domain reduction and VLANs, and Layer 3 via OSPF. • Manage network assets using HP tools. • Verify L3 routing protocol convergence and scalability.
10%	• Solution management (administrative and operational tasks) • Perform network management using HP best practices. • Perform administrative tasks.

Sample questions

Use the following questions to help assess whether you are ready to take the exam. Answers to these sample questions are

provided at the end of this guide.

1. Objective: Describe the concept, benefits, and types of redundancy, and apply redundancy types.
   Refer to the exhibit.

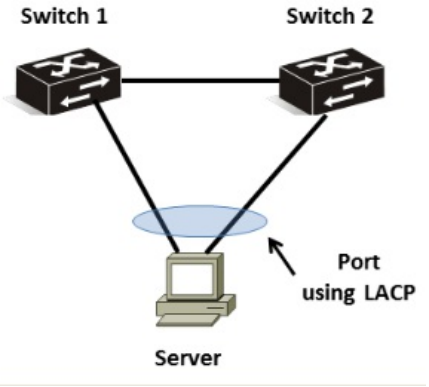

   The external server shown in the exhibit requires redundancy that uses link aggregation with LACP. Which solution meets these criteria?

   a. Comware switches that use distributed trunking or ProVision switches that use meshed stacking
   b. Comware or ProVision switches that use distributed trunking
   c. Comware switches that use IRF or ProVision switches that use meshed stacking
   d. Comware switches that use IRF or ProVision switches that use distributed trunking

2. Objective: Identify and describe the components of a converged infrastructure using the HP FlexNetwork Architecture framework and explain their roles.
   Which modules provide connectivity for blade servers installed in the HP BladeSystem c-Class enclosure to external switches? (Select two.)
   a. Virtual Connect module
   b. MSR900 module
   c. HP 6120XG module
   d. 8200zl module
   e. 5830AF module

3. Objective: Install and configure devices.
   Refer to the exhibit.

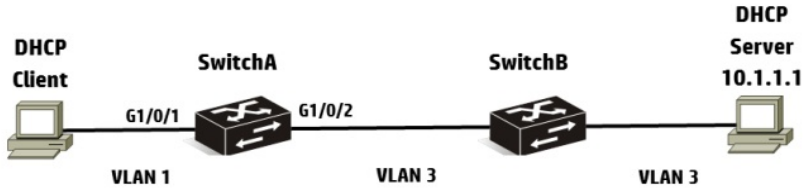

   A network administrator needs to configure DHCP on an HP Comware switch. The network administrator configures the following information:
   [SwitchA] interface vlan-interface 1
   [SwitchA-Vlan-interface1] dhcp select relay
   [SwitchA-Vlan-interface1] dhcp relay server-select 1
   After setting up DHCP relay, the network administrator has the DHCP client try to acquire addressing information, but the process fails. What should the network administrator do to solve this problem?
   a. Execute the routing command on SwitchA.
   b. Execute the dhcp enable command on SwitchA.
   c. Configure DHCP relay on SwitchB.
   d. Enable DHCP Snooping on SwitchA.

4. Objective: Validate the installed solution.
   A network administrator needs to restrict access to the console port of an HP Comware switch. The initial access should prompt for a username and password. Which configuration should the network administrator implement?
   a. user-interface con0

authentication-mode scheme
quit
username administrator
password cipher 12345678
quit

b. user-interface con0
authentication-mode local-user
quit
local-user administrator
password cipher 12345678
quit

c. user-interface aux0
authentication-mode scheme
quit
username administrator
password cipher 12345678
quit

d. user-interface aux0
authentication-mode scheme
quit
local-user administrator
password cipher 12345678
quit

5. Objective: Verify L3 routing protocol convergence and scalability.
Refer to the command output.

```
<Comware> display ospf peer
OSPF Process 1 with Router ID 10.0.0.31
                 Neighbor Brief Information

 Area: 0.0.0.0
 Router ID      Address        Pri  Dead-Time  Interface       State
 10.0.0.21      10.1.220.1      1    36        Vlan220         Full/DR
 10.0.0.41      10.1.220.2      1    33        Vlan220         Full/DROther
```

Based on this output, which statement is true?

a. This router is not participating in OSPF in VLAN 220.
b. This router is a DROTHER.
c. This router is the BDR.
d. This router is the DR.

6. Objective: Explain Layer 3 routing concepts and apply Layer 3 protocols.
Which OSPF state indicates that two routers have formed an adjacency?

a. loading state
b. exchange state
c. two-way state
d. full state

Answers

This section provides answers to and references for the sample questions.

1. Objective: Describe the concept, benefits, and types of redundancy, and apply redundancy types.
Refer to the exhibit.

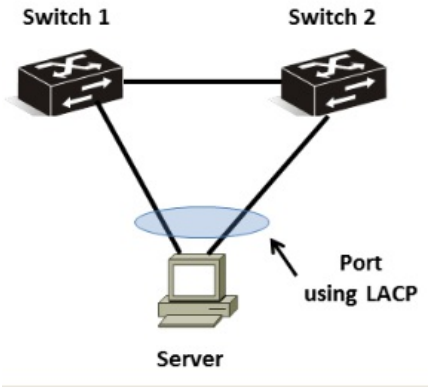

The external server shown in the exhibit requires redundancy that uses link aggregation with LACP. Which solution meets these criteria?

a. Comware switches that use distributed trunking or ProVision switches that use meshed stacking
b. Comware or ProVision switches that use distributed trunking
c. Comware switches that use IRF or ProVision switches that use meshed stacking
d. Comware switches that use IRF or ProVision switches that use distributed trunking

References

Explanation: The correct answer is d. Choice a is incorrect because meshed stacking does not support distributed LACP. Choices b and c are incorrect because Comware switches do not support distributed trunking.

2. Objective: Identify and describe the components of a converged infrastructure using the HP FlexNetwork Architecture framework and explain their roles.
Which modules provide connectivity for blade servers installed in the HP BladeSystem c-Class enclosure to external switches? (Select two.)

a. Virtual Connect module
b. MSR900 module
c. HP 6120XG module
d. 8200zl module
e. 5830AF module

References

Explanation: The correct answers are a and b. Choice c is incorrect because the 5830AF is a Comware switch. Choice d is incorrect because the 8200zl is a ProVision switch. Choice e is incorrect because the MSR900 is a Comware router.

3. Objective: Install and configure devices.
Refer to the exhibit.

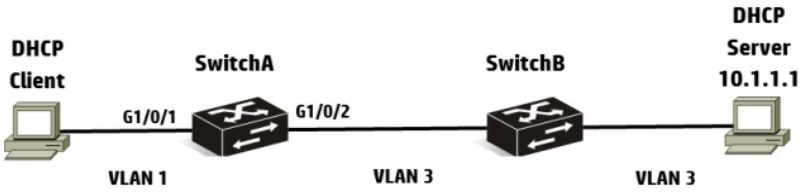

A network administrator needs to configure DHCP on an HP Comware switch. The network administrator configures the following information:
[SwitchA] interface vlan-interface 1
[SwitchA-Vlan-interface1] dhcp select relay
[SwitchA-Vlan-interface1] dhcp relay server-select 1
After setting up DHCP relay, the network administrator has the DHCP client try to acquire addressing information, but the process fails. What should the network administrator do to solve this problem?

a. Execute the routing command on SwitchA.

b. Execute the dhcp enable command on SwitchA.

c. Configure DHCP relay on SwitchB.

d. Enable DHCP Snooping on SwitchA.

References

Explanation: The correct answer is b. Choice a is incorrect because routing is enabled on Comware switches, by default. Choice c is incorrect because DHCP relay is not necessary on SwitchB since both ports are in VLAN 3. Choice d is incorrect because DHCP Snooping is used to detect rogue DHCP servers.

4. Objective: Validate the installed solution.
A network administrator needs to restrict access to the console port of an HP Comware switch. The initial access should prompt for a username and password. Which configuration should the network administrator implement?

a. user-interface con0
 authentication-mode scheme
 quit
username administrator
 password cipher 12345678
 quit

b. user-interface con0
 authentication-mode local-user
 quit
local-user administrator
 password cipher 12345678
 quit

c. user-interface aux0
 authentication-mode scheme
 quit
username administrator
 password cipher 12345678
 quit

d. user-interface aux0
 authentication-mode scheme
 quit
local-user administrator
 password cipher 12345678
 quit

References

Explanation: The correct answer is c. Choice a is incorrect because Comware switches do not have a “con0” port and there is no “local-user” authentication mode. Choice b is incorrect because there is no “username” command. Choice d is incorrect because Comware switches do not have a “con0” port and there is no “username” command.

5. Objective: Verify L3 routing protocol convergence and scalability.
Refer to the command output.

```
<Comware> display ospf peer
OSPF Process 1 with Router ID 10.0.0.31
                 Neighbor Brief Information

 Area: 0.0.0.0
 Router ID     Address       Pri  Dead-Time  Interface      State
 10.0.0.21     10.1.220.1     1    36        Vlan220        Full/DR
 10.0.0.41     10.1.220.2     1    33        Vlan220        Full/DROther
```

Based on this output, which statement is true?

a. This router is not participating in OSPF in VLAN 220.

b. This router is a DROTHER.

c. This router is the BDR.

d. This router is the DR.

References

Explanation: The correct answer is a. Answer b is incorrect because 10.0.0.21 is the DR. Answer c is incorrect because there is a DR and a DROTHER, which means that this router must be the BDR. Answer d is incorrect because this router has formed two adjacencies with other OSPF routers in VLAN 220.

6. Objective: Explain Layer 3 routing concepts and apply Layer 3 protocols.
   Which OSPF state indicates that two routers have formed an adjacency?
   a. loading state
   b. exchange state
   c. two-way state
   d. full state

References

Explanation: The correct answer is c. Choices a, b, and d are incorrect because these states only occur when sharing routes with the DRs, and BDRs, which is after an adjacency is formed.

For more information

HP ExpertOne: www.hp.com/go/ExpertOne-ContactUs

© Copyright 2014 Hewlett-Packard Development Company, L.P. The information contained herein is subject to change without notice. The only warranties for HP products and services are set forth in the express warranty statements accompanying such products and services. Nothing herein should be construed as constituting an additional warranty. HP shall not be liable for technical or editorial errors or omissions contained herein.

Created January 2014, Rev. 1